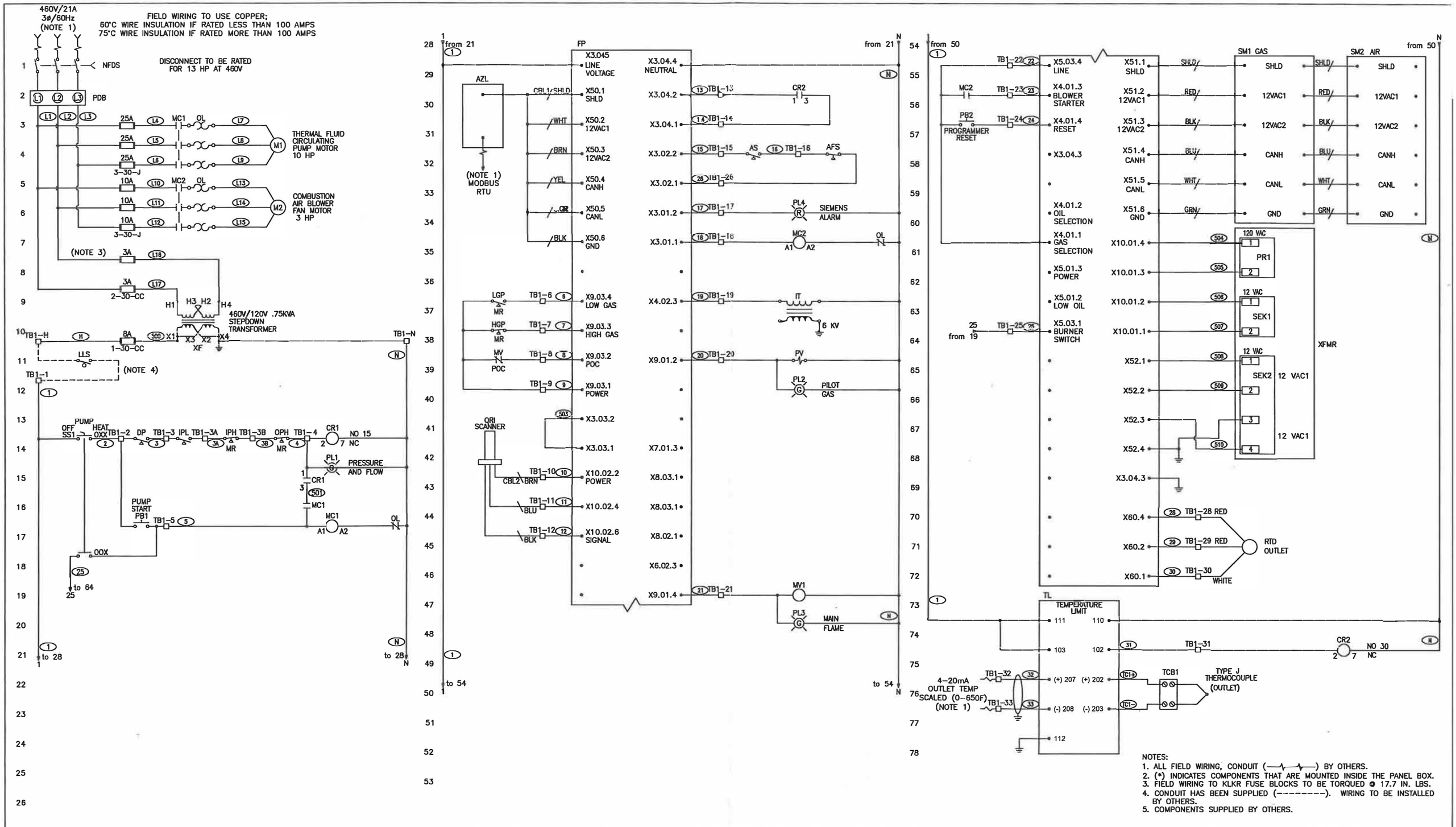

NOTES:
1. ALL FIELD WIRING, CONDUIT (—⁄—⁄—) BY OTHERS.
2. (*) INDICATES COMPONENTS THAT ARE MOUNTED INSIDE THE PANEL BOX.
3. FIELD WIRING TO KLKR FUSE BLOCKS TO BE TORQUED @ 17.7 IN. LBS.
4. CONDUIT HAS BEEN SUPPLIED (--------). WIRING TO BE INSTALLED BY OTHERS.
5. COMPONENTS SUPPLIED BY OTHERS.

REV	REVISION DESCRIPTION	B.O.M.	ELEC.ENG	MECH. ENG	CHECKED	APPROVED
A	AS BUILT UPDATES, SS1 J. LEWIS JUNE-18-13	-	LNL 6/18/13	-	-	KP 6/18/13

REVISION HISTORY

UNLESS OTHERWISE NOTED: DIMENSIONS ARE IN INCHES. TOLERANCES ON FRACTIONS ±1/16, (2) PLACE DEC. ±.01, (3) PLACE DEC. ±.005, ANGLES ±2 DEG. SURFACE FINISH 250 MICRO-INCHES

This design and drawings are proprietary and are the exclusive property of The Fulton Companies. The corporation does not permit their use except with prior written consent.

The items shown in this drawing may be covered by one or more patents of The Fulton Companies.

THIRD ANGLE PROJECTION

DRAWN BY: J. LEWIS MAY-13-13	MECH. ENG:	JOB NUMBER: 474533	DESCRIPTION: FT-0120-C ELECTRICAL SCHEMATIC CSD-1, GAS FIRED NEMA 1, THERMAL FLUID HEATER
CHECKED BY:	ELE C. ENG: LNL MAY-15-13	PROJECT NAME: TITAN ADHESIVES	
B.O.M. REVIEW	APPROVED BY: KP MAY-15-13	PROJECT MANAGER:	SHEET 1 OF 2

The Fulton Companies
972 Centerville Road
Pulaski, New York USA 13142

Fulton

DRAWING NUMBER: T53-10019

REV: A

ITEM	CATALOG	DESCRIPTION	TAG	QTY
1	————————	HIGH GAS PRESSURE SWITCH	HGP	1
2	————————	LOW GAS PRESSURE SWITCH	LGP	1
3	————————	LIQUID LEVEL SWITCH	LLS	1
4	————————	MAIN GAS VALVE	MV1	1
5	————————	PILOT VALVE	PV	1
6	PO#*	30" X 30" X 16" PANEL BOX	PNL	1
7	5-21-000273	2 GAUGE PANEL BRACKET		1
8	2-30-000529	GAUGE (0-100 PSI)		1
9	2-30-000530	GAUGE (0-200 PSI)		1
10	2-30-000260	AIR SWITCH	AFS	1
11	2-30-000270	AIR SWITCH	AS	1
12	2-30-000454	DIFFERENTIAL PRESSURE SWITCH	DP	1
13	2-40-000082	IGNITION TRANSFORMER 6KV	IT	1
14	2-40-000131*	CONTROL RELAY 120VAC	CR1	1
15	2-40-000096*	CONTROL RELAY BASE		1
16	2-40-000131*	CONTROL RELAY 120VAC	CR2	1
17	2-40-000096*	CONTROL RELAY BASE		1
18	2-40-000431*	SIEMENS TRANSFORMER	XFMR	1
19	2-40-000433	AIR/OIL/FGR SERVO MOTOR	SM2	1
20	2-40-000434	GAS SERVO MOTOR	SM1	1
21	2-40-000441	STEPDOWN TRANSFORMER .75 KVA	XF	1
22	2-40-000449*	LMV51 LINKAGELESS CONTROLLER	FP	1
23	2-40-000437*	AZL DISPLAY		1
24	2-40-000447*	CAN BUS WIRE		1
25	2-40-000430*	DISPLAY CABLE		1
26	2-40-000429*	PLUG SET		1
27	2-40-000432*	BUS WIRE CONNECTION		1
28	2-40-000465	QRIA2 SCANNER	QRI	1
29	2-40-000466	SCANNER MOUNTING BRACKET		1
30	2-40-000567*	MOTOR CONTACTOR 120V, 9A	MC2	1
31	2-40-000573*	THERMAL OVERLOAD 3-12 AMP		1
32	2-40-000643*	MOTOR CONTACTOR 120V, 17A	MC1	1
33	2-40-000651*	THERMAL OVERLOAD 6-25 AMP		1
34	2-40-000879*	ADD-ON CONTACT BLOCK		1
35	2-40-000791*	GREEN PUSH BUTTON	PB1	1
36	2-40-000795*	N.O. BLACK PUSH BUTTON	PB2	1
37	2-40-000855	2" RTD	RTD	1
38	2-40-000862	UT35A-L TEMPERATURE LIMIT	TL	1
39	2-40-000880*	THERMOCOUPLE BLOCK	TCB1	1
40	2-40-000881*	BLOCK END CAP		1
41	2-40-000802*	2" PROBE THERMOCOUPLE		1
42	2-40-003040	HIGH LIMIT PRESSURE CONTROL (150PSI)	IPH	1
43	2-40-003040	HIGH LIMIT PRESSURE CONTROL (150PSI)	OPH	1
44	2-40-003041	LOW LIMIT PRESSURE CONTROL (50PSI)	IPL	1
45	2-45-000000*	POWER DISTRIBUTION BLOCK	PDB	1
46	2-45-000212*	3 POSITION SELECTOR SWITCH BLACK	SS1	1
47	2-45-000251*	3 POLE 30 AMP FUSE HOLDER CLASS J	3-30-J	2
48	2-45-000580*	30 AMP FINGERSAFE FUSE BLOCK COVER		6
49	2-45-000267*	10 AMP FUSE JTD_JD	10A	3
50	2-45-000278*	25A FUSE JTD_JD	25A	3
51	2-45-000365*	8 AMP FUSE KLKD	8A	1
52	2-45-000371*	1 POLE 30 AMP FUSE HOLDER CLASS CC	1-30-CC	1
53	2-45-000381*	3 AMP FUSE KLDR	3A	2
54	2-45-000411*	RED INDICATOR LIGHT 120VAC	PL4	1
55	2-45-000412*	GREEN INDICATOR LIGHT 120VAC	PL1	1
56	2-45-000412*	GREEN INDICATOR LIGHT 120VAC	PL2	1
57	2-45-000412*	GREEN INDICATOR LIGHT 120VAC	PL3	1
58	2-45-000433*	2 POLE 30 AMP FUSE HOLDER CLASS CC	2-30-CC	1
59	2-45-001008*	30 AMP NON-FUSED DISCONNECT SWITCH	NFOS	1
60	2-40-000992*	DISCONNECT HANDLE		1
61	2-40-000839*	DISCONNECT SHAFT		1

TB1
H
N
N
N
N
1
1
2
3
3A
3B
4
5
6
7
8
9
10
11
12
13
14
15
16
17
18
19
20
21
22
23
24
25
26
28
29
30
31
32
33

NOTES:
1. ALL FIELD WIRING, CONDUIT (—⊀—⊀—) BY OTHERS.
2. (*) INDICATES COMPONENTS THAT ARE MOUNTED INSIDE THE PANEL BOX.
3. FIELD WIRING TO KLKR FUSEBLOCKS TO BE TORQUED @ 17.7 IN. LBS.
4. CONDUIT HAS BEEN SUPPLIED (————————). WIRING TO BE INSTALLED BY OTHERS.
5. COMPONENTS SUPPLIED BY OTHERS.

REV	REVISION DESCRIPTION	B.O.M.	ELEC. ENG	MECH. ENG	CHECKED	APPROVED
A	AS BUILT UPDATES, SS1 J. LEWIS JUNE-18-13	- -	LNL 6/18/13	- -	- -	KP 6/18/13

REVISION HISTORY

UNLESS OTHERWISE NOTED:
DIMENSIONS ARE IN INCHES
TOLERANCES ON
FRACTIONS ± 1/16
(2) PLACE DEC. ± .01
(3) PLACE DEC. ± .005
ANGLES ± 2 DEG.
SURFACE FINISH
250 MICRO-INCHES

This design and drawings are proprietary and are the exclusive property of The Fulton Companies. The corporation does not permit their use except with prior written consent.

The items shown in this drawing may be covered by one or more patents of The Fulton Companies.

THIRD ANGLE PROJECTION

DRAWN BY: J. LEWIS MAY-13-13	MECH. ENG:	JOB NUMBER: 474533	DESCRIPTION: FT-0120-C ELECTRICAL SCHEMATIC CSD-1, GAS FIRED NEMA 1, THERMAL FLUID HEATER
CHECKED BY:	ELEC. ENG: LNL MAY-15-13	PROJECT NAME: TITAN ADHESIVES	
B.O.M. REVIEW	APPROVED BY: KP MAY-15-13	PROJECT MANAGER:	SHEET 2 OF 2

The Fulton Companies
972 Centerville Road
Pulaski, New York USA 13142

Fulton

DRAWING NUMBER: T53-10019

REV: A